SPECIFICATION APPLIED

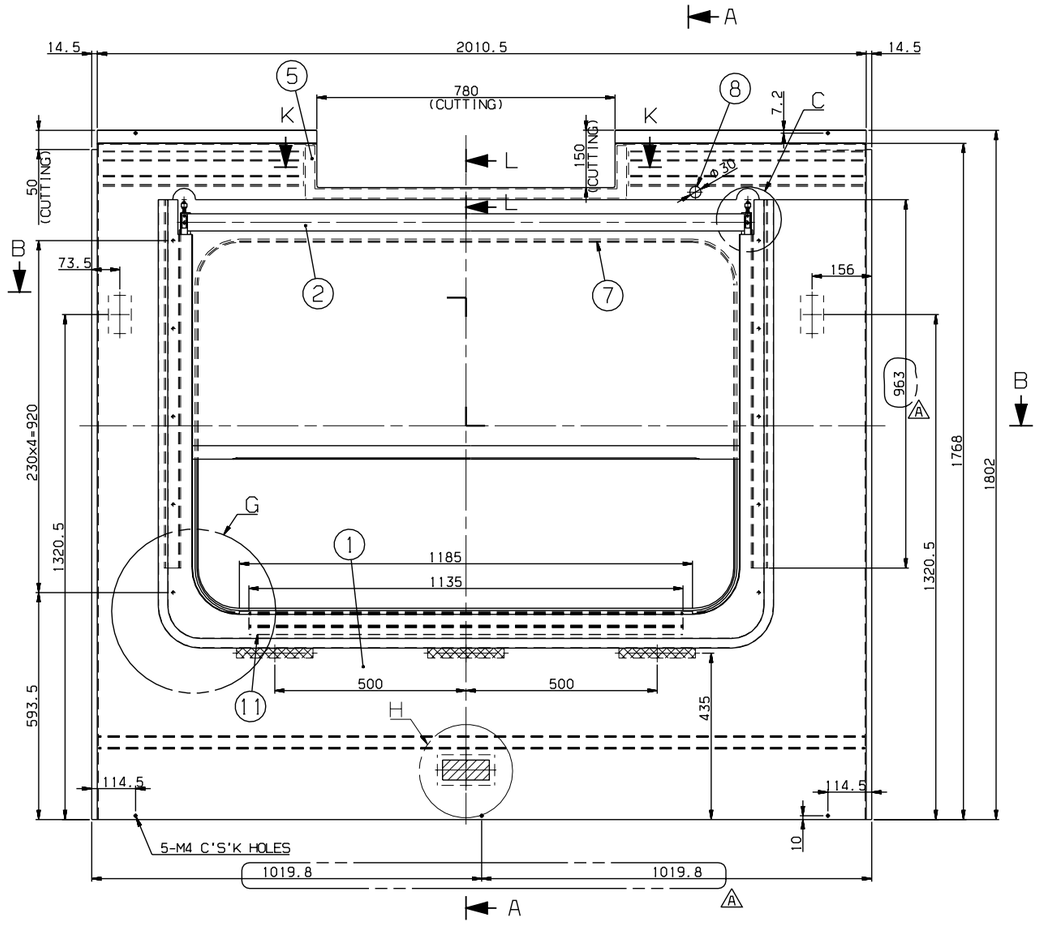

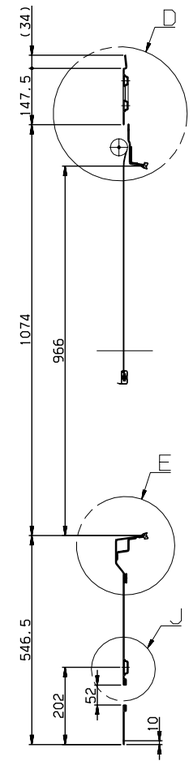

SECTION A-A

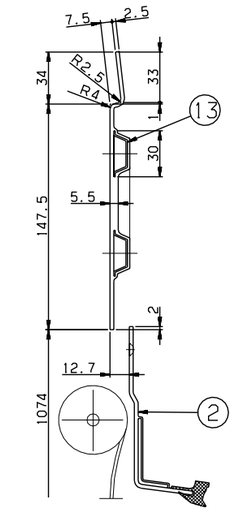

DETAIL D
SCALE=1/2

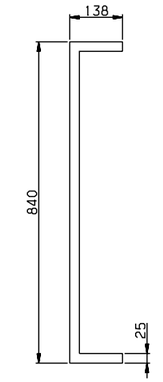

DETAIL #5

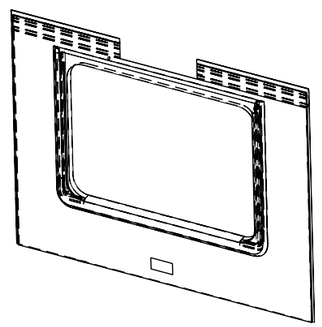

ISO VIEW

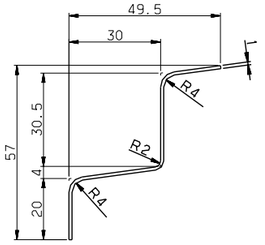

DETAIL #11
SCALE=1/1

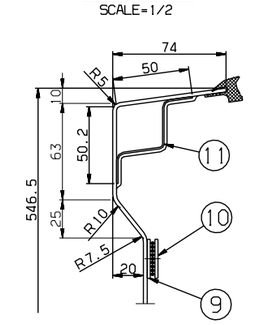

DETAIL E
SCALE=1/2

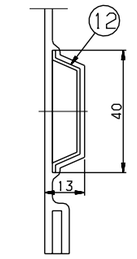

DETAIL J
SCALE=1/1

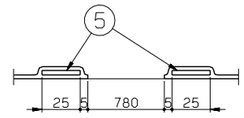

SECTION K-K
SCALE=1/2

NOTE
1. AN INTERIOR PANEL'S COLOR(RAL 7047) AND SURFACE SHALL BE MANUFACTURED AFTER SAMPLE'S APPROVAL BY CUSTOMER
2. PART 7 SHALL BE CUT ADEQUATELY AND USED
3. PART 8 IS TO PROTECT
4. PART 2 SHALL BE WELL OPERATED UNDER CONDITION OF ASSEMBLY
5. PART 9 SHALL BE FIXED ON THE PART 1, AND PART 10 SHALL BE DELIVERED SEPERATETLY
6. THE INTERFACE BETWEEN PART 1 AND PART 2 SHALL BE STRONGLY SEALED
△7. PART 4 SHOULD BE APPLIED WITH PART 15.

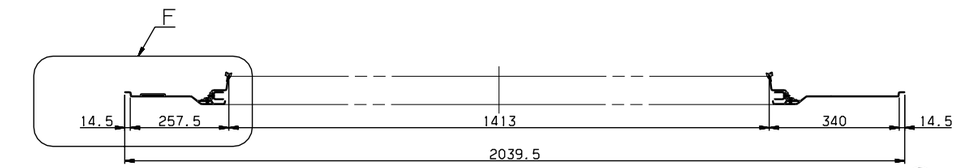

SECTION B-B

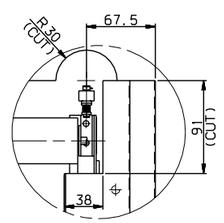

DETAIL C
SCALE=1/3

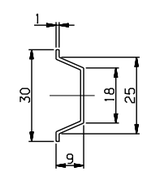

DETAIL #13
SCALE=1/1

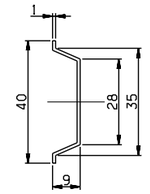

DETAIL #12
SCALE=1/1

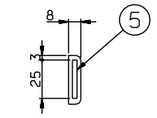

SECTION L-L
SCALE=1/2

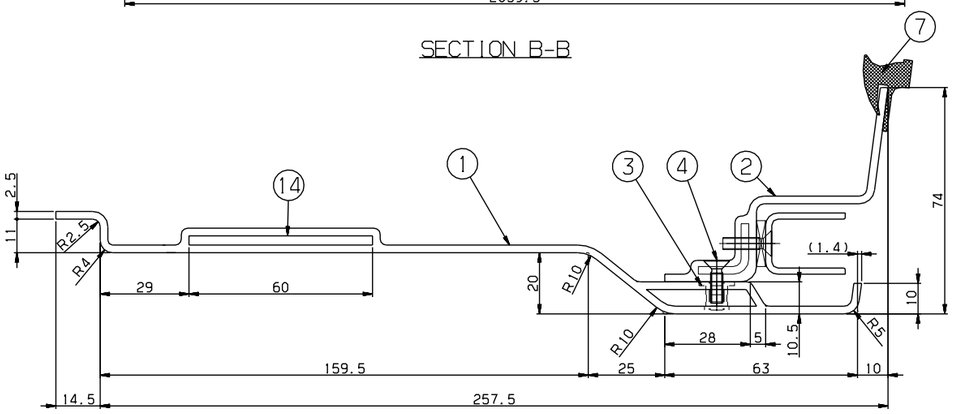

DETAIL F
SCALE=1/1

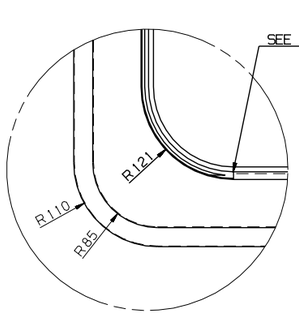

DETAIL G
SCALE=1/4

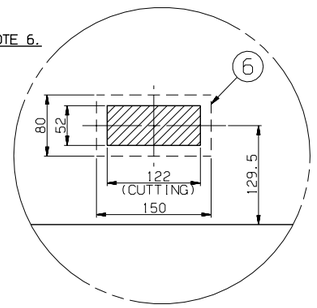

DETAIL H
SCALE=1/4

NO.	PART NO.	DESCRIPTION		Q'TY		REMARKS
△ 15	CP910004-406	ADHESIVE	ASSY	1		LOCTITE 242
14	RFP51131EJ0-014	SEAT,TAP	SUS304	2		PL T3x60x100
13	RFP51131EJ0-013	STIFFENER	A1050P	4		T1
12	RFP51131EJ0-012	STIFFENER	A1050P	1		T1
11	RFP51131EJ0-011	STIFFENER	SUS304	1		T1,L=1135
10	RFP51131EJ0-010	DUAL_LOCK,FASTENER	ASSY	3		3M,SJ-3550 L=200(DUAL TAPE)
9	RFP51131EJ0-009	DUAL_LOCK,FASTENER	ASSY	3		3M,SJ-3551 L=200(DUAL TAPE)
8	RFP90013AN0	RUBBER,BUSH	ASSY	1		F2.2332
7	RFP51131EJ0-007	RUBBER,SECTION	ASSY	1		RFP51011AN0,L=4600
6	RFP51131EJ0-006	SEAT,TAP	SUS304	1		PL T3x150x80
5	RFP51131EJ0-005	SEAT,TAP	SUS304	1		PL T3x840x138
4	RS60607-098S	SCREW,F.H	SUS304	10		M4x14
3	RFP51131EJ0-003	NUTSERT	SUS304	10		M4
2	RFP51009AN0	PANEL,BLIND WINDOW	ASSY	1		
1	RFP51131EJ0-001	PANEL	FRP	1		T2.5

승인 APP	JeongYul Lee 2014.10.14	재질 MAT'L	ASSY	마 소	WINDOW,MASK,TYPE Z
검토 CHK	KeongBong Park 2014.10.14	중량 G.W		TITLE	
설계 DGN	HeonUk Lee 2014.10.14	일반공차	MC / WD / CT	도면 번호 DRG. NO	RFP51131EJ0 Ver. 00 Rev. -A
제도 DRG	HeeSook Jeong 2014.10.14		B / B / B	SCALE 1/8	매수 SHEET 1 of 1
				SIZE A1	

RSD1402 RFP- -PRJT

HYUNDAI Rotem 현대로템주식회사

기호 MARK	일자 DATE	변경내역 DETAIL OF REVISION(E.C ZONE)	설변번호 E.C NO.	설계 DGN	검도 CHK	승인 APP
A	2014.12.18	ADDED PART NO.#15 & DIMENSION	RSD1402-U071	H.U.LEE	K.B.PARK	J.Y.LEE

본 도면은 당사 재산권에 속하므로 무단복제/배포 금지됨. PROPERTY OF ISSUING ENTITY, CANNOT BE DISTRIBUTED OR REPRODUCED WITHOUT AUTHORIZATION.

CATIA